Ecophon Solo™ Baffle

Ecophon Solo™ Baffle, primarily when it is not possible to install a wall-to-wall ceiling. Baffles are suitable in buildings where the volume should be maintained, the natural light is brought into the room from skylights or as an option when TABS (Thermally Activated Building System) is selected as cooling system.

The system consists of two alternative installation methods; Ecophon Solo™ Baffle Anchor for direct fix to the ceiling or Solo™ Baffle Hook for suspension on wire.

Different possibilities exist to suspend Solo™ Baffle Hook using Connect™ Adjustable wire hanger or Connect™ grid system.

The Solo Baffles and Connect™ accessories have an approximate weight of 2-3 kg/m. The baffles are manufactured fromhigh density glass wool, with Akutex™ FT surface on both sides. The edges are straight cut and painted. Ecophon Solo™ Baffles are easily demountable systems.

Plantronics, Hoofddorp, Netherlands

SYSTEM RANGE

Size, mm	1200x200	1200x300	1200x600	1800x200	1800x300	1800x600
Special Fixing	•	•	•	•	•	•
Thickness	40	40	40	40	40	40
Inst. Diagr.	M414, M491	M414, M491	M414, M491	M414, M491	M414, M491	M414, M491

© Ecophon Group

Solo Baffle/Anchor

Solo Baffle/Anchor installation

Solo Baffle/Hook

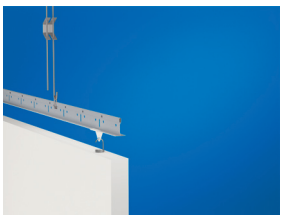

Solo Baffle/Hook installation

Acoustic

Sound Absorption:

Test results according to EN ISO 354:2003 NOTE: Results shown are not comparable with results according to older versions of this standard due to discrepancies in test method. Classification according to EN ISO 11654, and the single value ratings for Noise Reduction Coefficient, NRC and Sound Absorption Average, SAA according to ASTM C 423.

α_p, Practical sound absorption coefficient

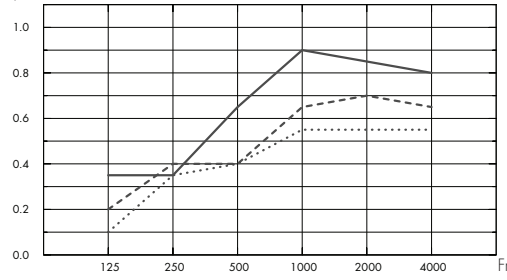

··· Solo Baffle 1200/1800x200, spacing 600mm, direct mounting

--- Solo Baffle 1200/1800x300, spacing 600mm, direct mounting

– Solo Baffle 1200/1800x600, spacing 600mm, direct mounting

o.d.s = overall depth of system

A_{eq}, Equivalent absorption area per unit (m^2 sabin)

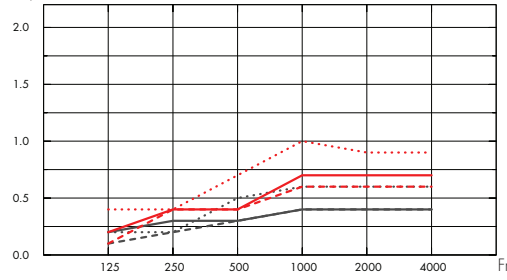

--- Solo Baffle 1200x200

– Solo Baffle 1200x300

··· Solo Baffle 1200x600

--- Solo Baffle 1800x200

– Solo Baffle 1800x300

··· Solo Baffle 1800x600

o.d.s = overall depth of system

	THK mm	o.d.s. mm	α_p, Practical sound absorption coefficient						α_w
			125 Hz	250 Hz	500 Hz	1000 Hz	2000 Hz	4000 Hz	
c600	40	200	0.10	0.35	0.40	0.55	0.55	0.55	0.50
c600	40	300	0.20	0.40	0.40	0.65	0.70	0.65	0.50
c600	40	600	0.35	0.35	0.65	0.90	0.85	0.80	0.65

	THK mm	o.d.s. mm	A_{eq}, Equivalent absorption area per unit (m^2 sabin)					
			125 Hz	250 Hz	500 Hz	1000 Hz	2000 Hz	4000 Hz
1200x200 c600	40	200	0.10	0.20	0.30	0.40	0.40	0.40
1200x300 c600	40	300	0.20	0.30	0.30	0.40	0.40	0.40
1200x600 c600	40	600	0.20	0.20	0.50	0.60	0.60	0.60
1800x200 c600	40	200	0.10	0.40	0.40	0.60	0.60	0.60
1800x300 c600	40	300	0.20	0.40	0.40	0.70	0.70	0.70
1800x600 c600	40	600	0.40	0.40	0.70	1.00	0.90	0.90

© Ecophon Group

Indoor Air Quality

Certificate / Label	
French VOC, A+	•
Finnish M1	•

Environmental Footprint

Solo Square, Kg CO_2 equiv/m^2: 8,07

From EPD in conformity with ISO 14025 / EN 15804

Circularity

Fully recyclable.

Fire safety

Country	Standard	Class
Europe	EN 13501-1	A2-s1,d0

The glass wool core of the tiles is tested and classified as non-combustible according to EN ISO 1182.

Humidity Resistance

Class A, relative humidity 70% and 25°C, according to EN 13964:2014

Visual appearance

White Frost, nearest NCS colour sample S 0500-N, 85% light reflectance. Gloss < 1.

Cleanability

Daily dusting and vacuum cleaning. Weekly wet wiping.

Accessibility

The tiles are demountable.

Installation

Installed according to installation diagrams, installation guides and drawing aid. For information regarding minimum overall depth of system see quantity specification.

Mechanical properties

Additional live load has to be fixed to the soffit.

CE

Ecophon ceiling systems are CE marked according to the European harmonized standard EN13964:2014. CE marked construction products are covered by a Declaration of Performance (DOP) which enables customers and users to easily compare performance of products available on the European market.

INSTALLATION DIAGRAM (M414) FOR ECOPHON SOLO BAFFLE/ANCHOR

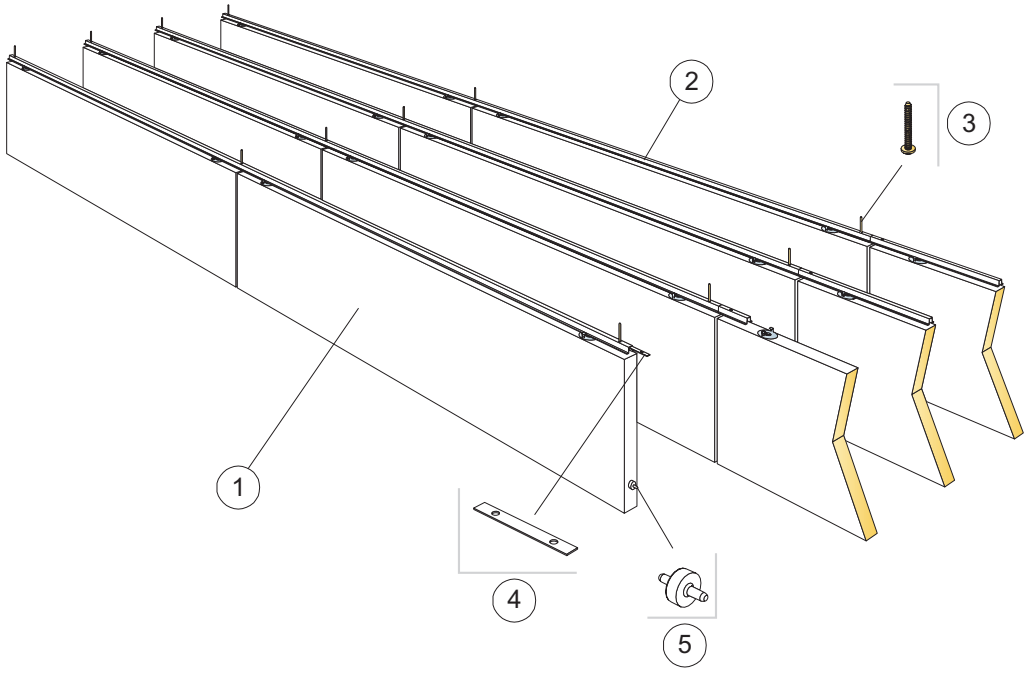

QUANTITY SPECIFICATION (EXCL. WASTAGE)

		Size, mm					
		1200x200	**1200x300**	**1200x600**	**1800x200**	**1800x300**	**1800x600**
1	Solo Baffle/Anchor	2,8/m²	2,8/m²	2,8/m²	1,9/m²	1,9/m²	1,9/m²
2	Connect Baffle Profile, installed at 300 mm centres	3,3m/m²	3,3m/m²	3,3m/m²	3,3m/m²	3,3m/m²	3,3m/m²
3	Connect Anchor Screw, fixed at 1200 mm centres	2,8/m²	2,8/m²	2,8/m²	2,8/m²	2,8/m²	2,8/m²
4	Connect Profile connector, installed at 2400 mm centres	1,4/m²	1,4/m²	1,4/m²	1,4/m²	1,4/m²	1,4/m²
5	Connect Guiding pin, installed at 1200 mm centres	2,8/m²	2,8/m²	2,8/m²	1,9/m²	1,9/m²	1,9/m²

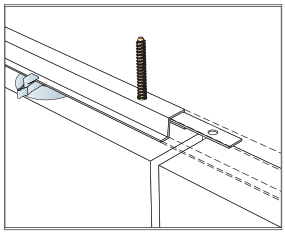

Fixing of Connect Profile connector

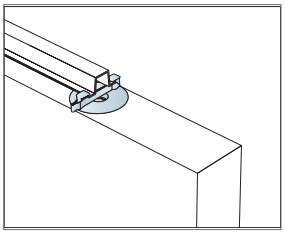

The baffles are secured with clips

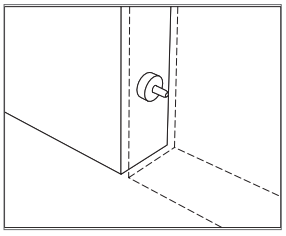

Connect Guiding pin, used to fix distance and level between panels

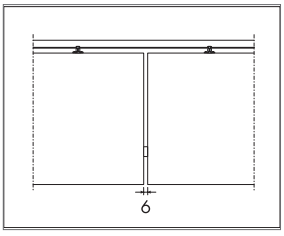

Distinct gap of 6 mm between baffles with Connect Guiding pin

INSTALLATION DIAGRAM (M491) FOR ECOPHON SOLO BAFFLE/HOOK

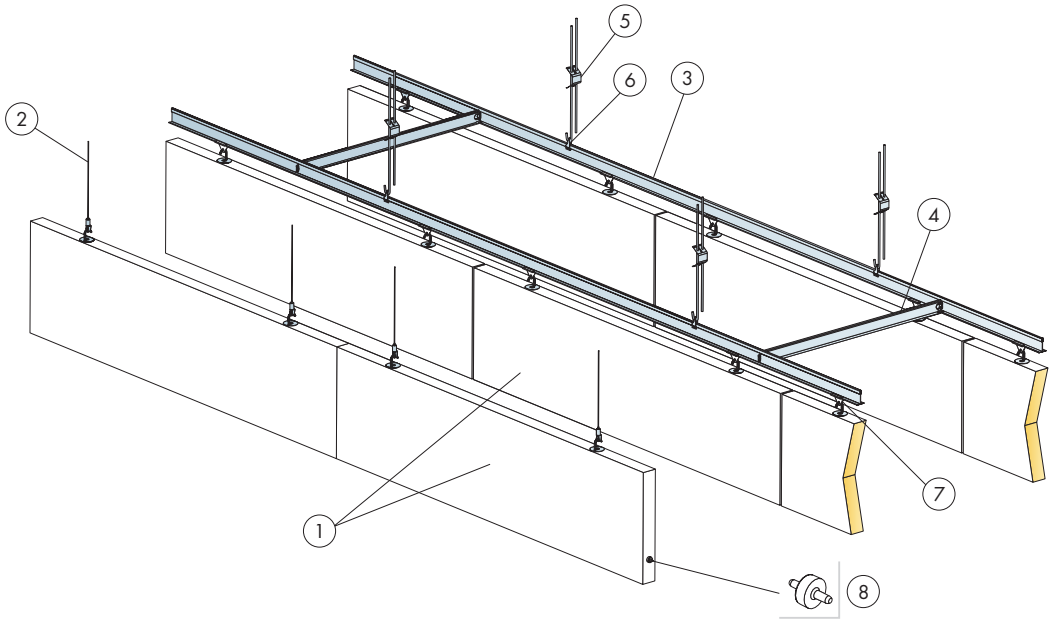

© Ecophon Group

QUANTITY SPECIFICATION (EXCL. WASTAGE)

		Size, mm					
		1200x200	**1200x300**	**1200x600**	**1800x200**	**1800x300**	**1800x600**
1	Solo Baffle/Hook	1,4/m²	1,4/m²	1,4/m²	0,9/m²	0,9/m²	0,9/m²
2	Connect Adjustable wire hanger (Alt 1)	2/panel	2/panel	2/panel	2/panel	2/panel	2/panel
3	Connect T24 Main runner, installed at 600 mm centres	1,7m/m²	1,7m/m²	1,7m/m²	1,7m/m²	1,7m/m²	1,7m/m²
4	Connect T24 Cross tee, L=600 mm, installed at 1800 mm centres	0,6m/m²	0,6m/m²	0,6m/m²	0,6m/m²	0,6m/m²	0,6m/m²
5	Connect Adjustable hanger (Alt 2)	1,4/m²	1,4/m²	1,4/m²	1,4/m²	1,4/m²	1,4/m²
6	Connect Hanger clip (Alt 2)	1,4/m²	1,4/m²	1,4/m²	1,4/m²	1,4/m²	1,4/m²
7	Connect Baffle clip C3 (Alt 2)	2,8/m²	2,8/m²	2,8/m²	1,8/m²	1,8/m²	1,8/m²
8	Connect Guiding pin, installed at 1200 mm centres	2,8/m²	2,8/m²	2,8/m²	0,9/m²	0,9/m²	0,9/m²

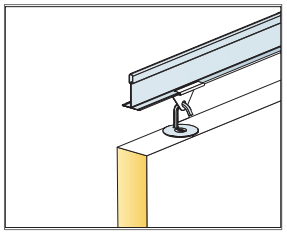

Detail of suspension

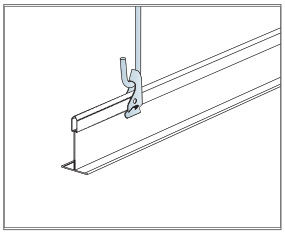

Suspension with adjustable hanger and clip

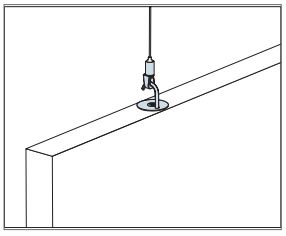

Suspension with Connect Adjustable wire hanger